2010－12－29

IGBT

Ş

¢

i

IGBT ¢ IGBT

IGBT ¢

IGBT

IGBT IGBT

¢

Ş

¢

i i ō MOSFET Ŏ

ō IGBT Ŏ ¢

Ş

1. i ¢

¢

i ¢

2. ¢ IGBT

20kHz 400

¢ 80%

1/5 – 1/10 ¢

1/2 – 1/4 ¢

3. ¢

¢

20mS IGBT

50uS ¢

¢

4. ¢ ¢

IGBT

ş IGBT

20 kHz 350A

IGBT

¢

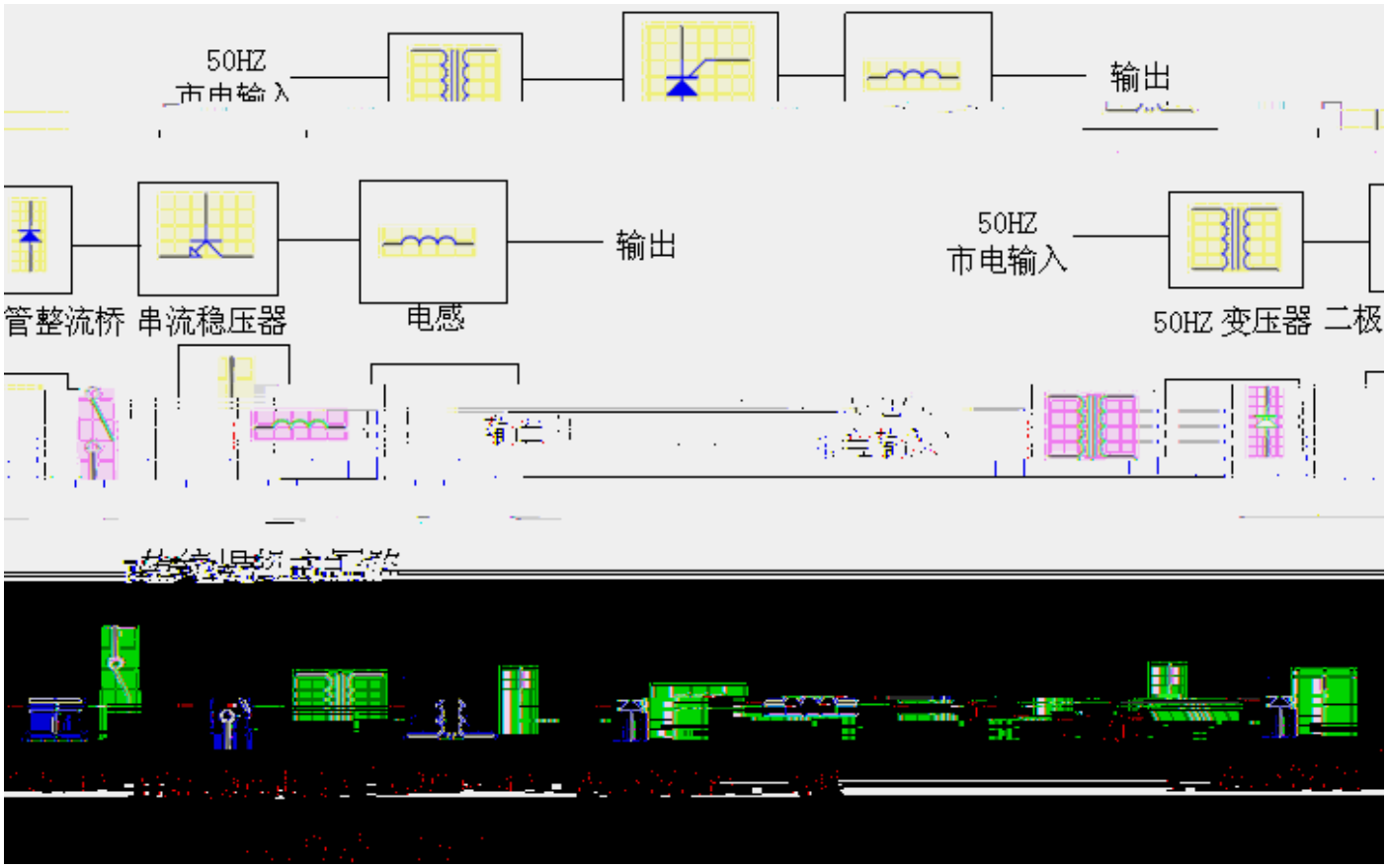

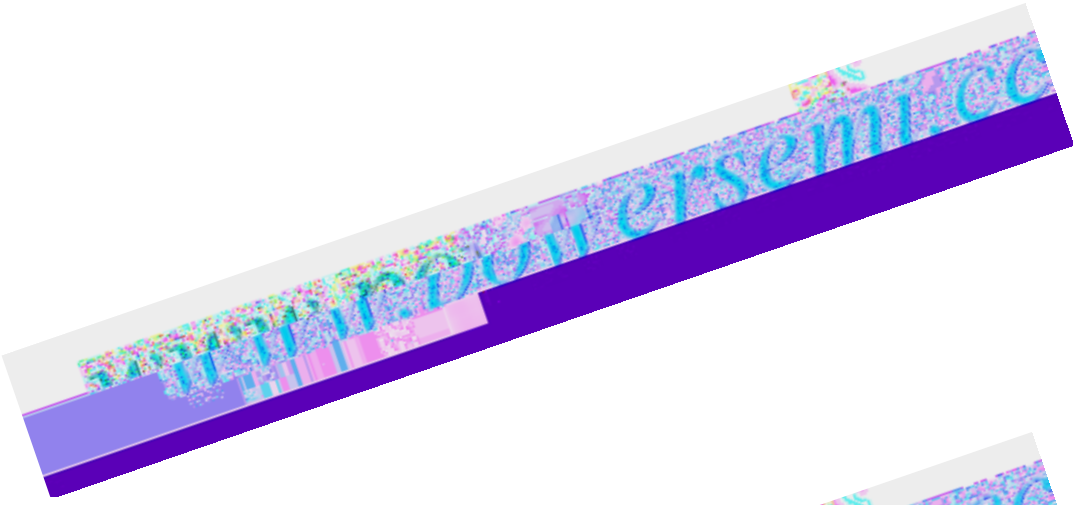

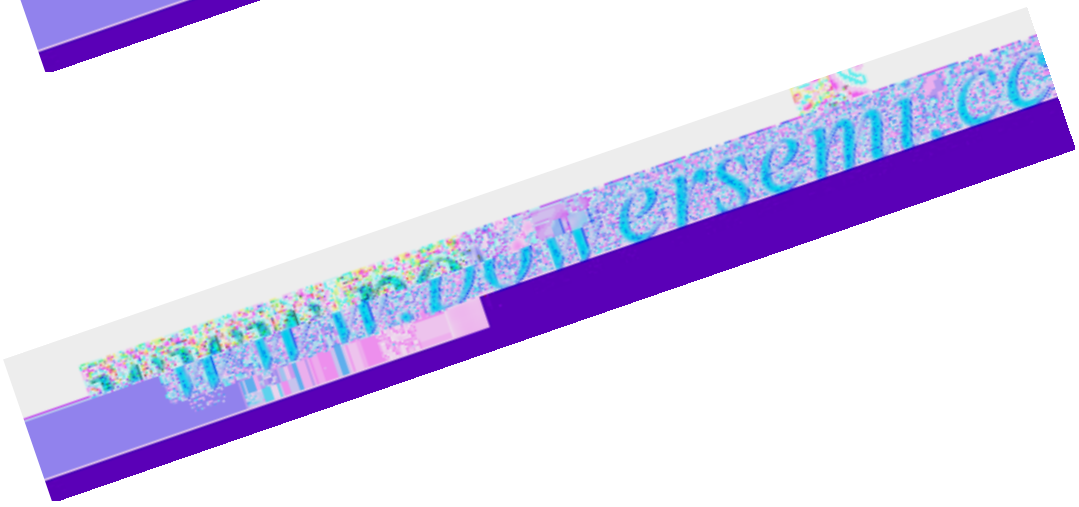

Ş ¢

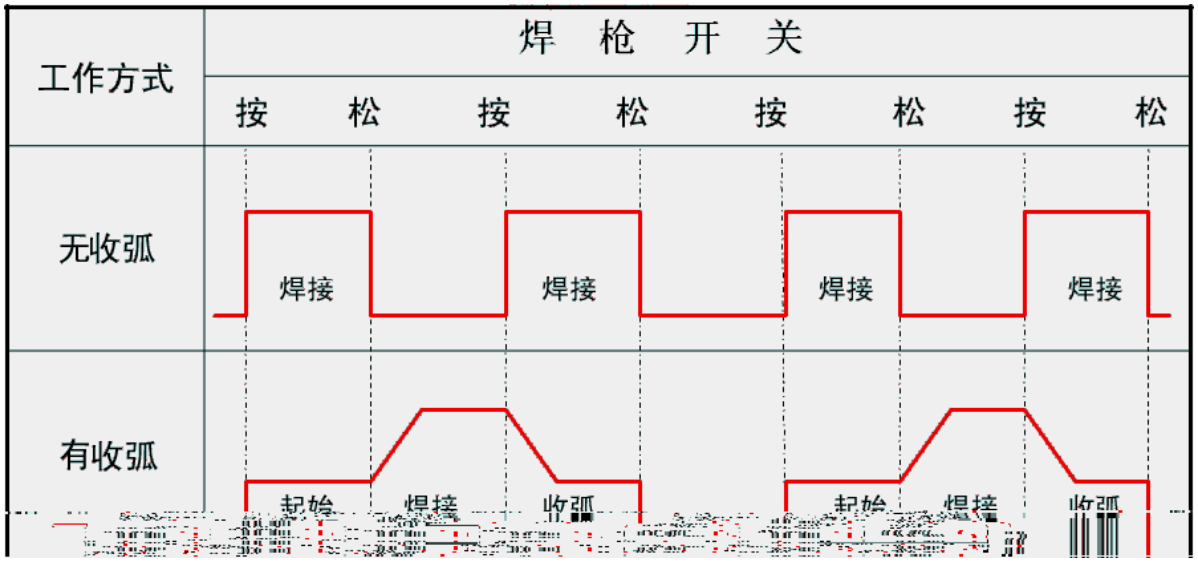

Ş



IGBT ş

1 Ŏ ¢ ō

Ŏ ¢

2 Ŏ ¢ ş 1uF ± 5% 500V AC ¢

3 Ŏ ¢

¢ i

ō Ŏ¢ ş 40uF ± 5% 800V DC 20uF ± 3% 1400V DC ¢

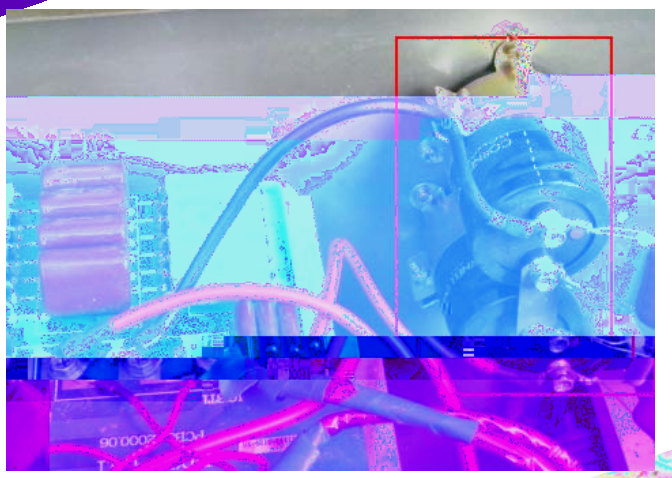

4 Ŏ IGBT ¢

180 ¢ Q1 Q4 Q2 Q3 Q1Q4

Q2Q3 180 ¢

¢ 180 ¢

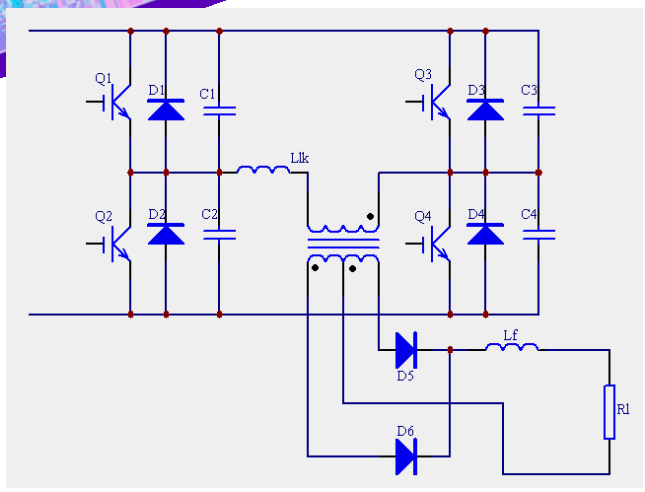

5 ŏ IGBT – ¢ IGBT

E – 500 ş 50Hz AC380V

500A 38V 60%

