2010－05－19

IGBT

400A 1200V ，

，1200V,200-400A 62mm ，

，， ，

，

，

100A

，

，

，

1.1 4

a)

b)

c)

d)

e)

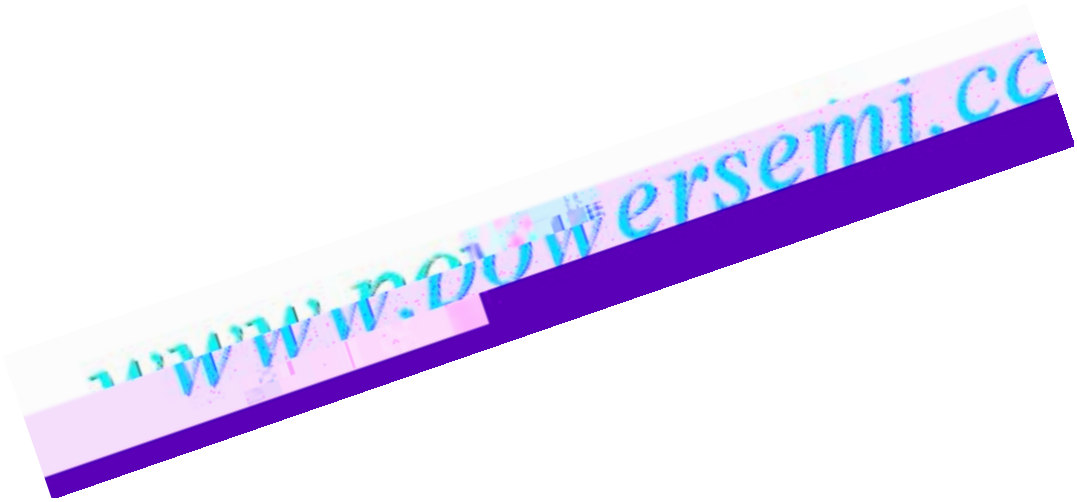
www.DataSheet4U.com

1 2

≈

I

module :

GD200HFL120C2S

2.5V(125) 2.1V,(125)

=0.8V

$$\alpha \quad \frac{i_{C1}-i_{C2}}{i_{C1}+i_{C2}} \quad \frac{V_{cesat2}-V_{cesat1}}{V_{cesat1}+V_{cesat2}-2Vo}$$

2.2V 2.1V,

=0.8V

$$\alpha \quad \frac{i_{C1}-i_{C2}}{i_{C1}+i_{C2}} \quad \frac{V_{cesat2}-V_{cesat1}}{V_{cesat1}+V_{cesat2}-2Vo}$$

0.1V , =200A

module, 6A

0.2V , ,

2

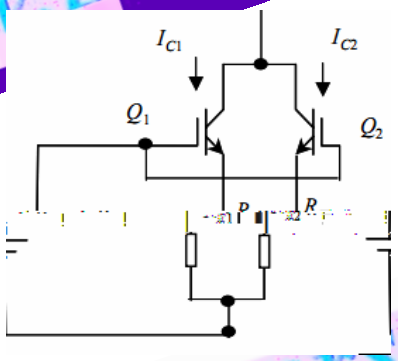

0.2V , , ,

GD200HFL120C2S

=200A, 100A

=1.7V

$\frac{Uce}{I}$ Ω

$4\times10^{-5}m^2$ 1 0.8m 1

0.6m 30 1.8×10^{-8} Ω*m

ρ $\frac{L}{S}$ $\frac{0.8}{4\times10^{-5}}$ Ω ρ $\frac{L}{S}$ $\frac{0.6}{4\times10^{-5}}$

Ω

:α $\frac{i_{C1}-i_{C2}}{i_{C1}+i_{C2}}$ $\frac{(Ro+RE1)-(Ro+RE2)}{(Ro+RE1)+(Ro+RE2)}$

3

Vce Ic

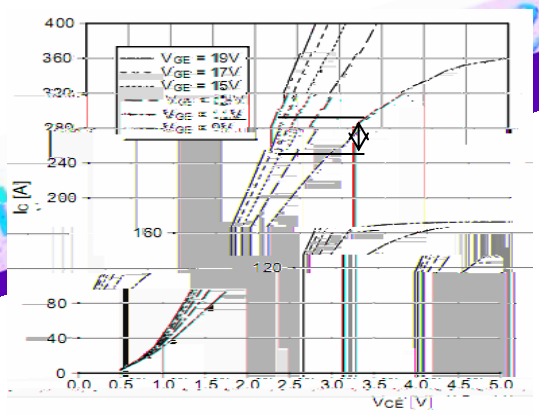

3

3

=13V , =2.5V ≈ 255A

=15V =2.5V ≈ 285A

$\alpha \frac{i_{C1}-i_{C2}}{i_{C1}+i_{C2}}$ 2 30A

4

,

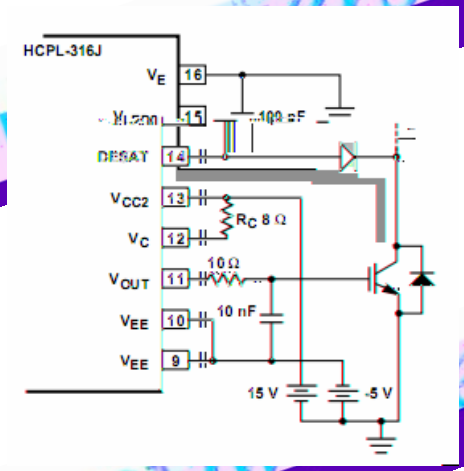
HCPL-316J
VE
16
15
DESAT
14
VCC2
13
VC
12
VOUT
11
VEE
10
VEE
9
100 pF
RG 8 Ω
10 Ω
10 nF
15 V
-5 V

4

4

4

0.5V

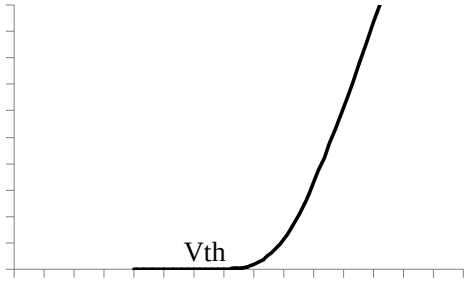
Vth

5

5

module :

150A

2.2V 2.1V,

=1.3V

$$\alpha \frac{i_{C1}-i_{C2}}{i_{C1}+i_{C2}} \frac{Vf2-Vf1}{Vf1+Vf2-2Vo}$$

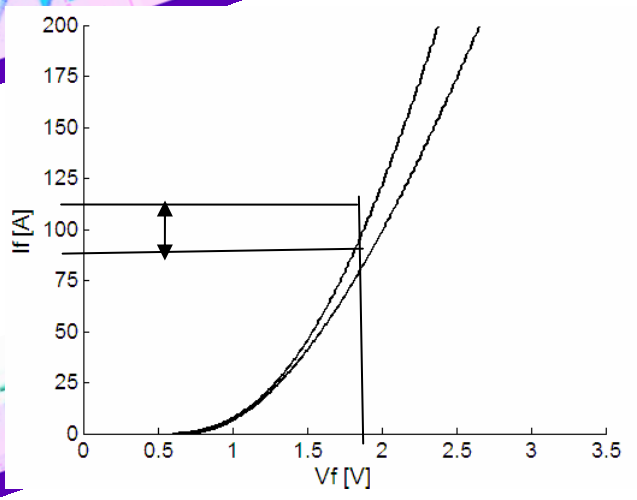

1)

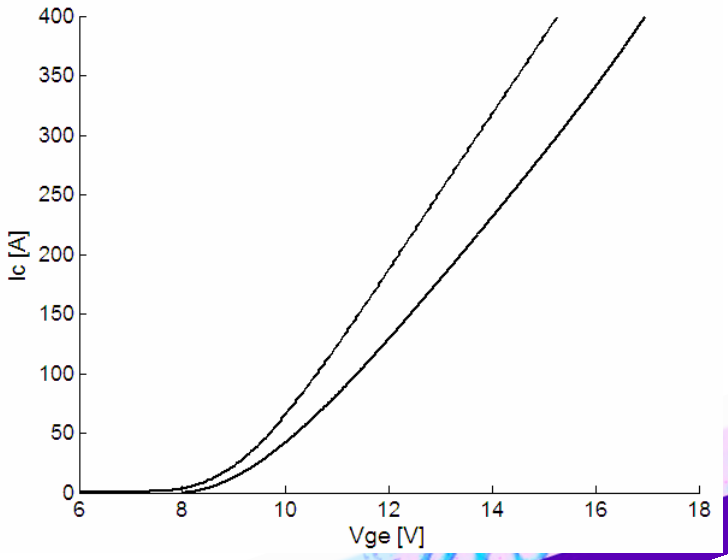

3

3 3

RLC $\frac{d^2u_c}{dt^2}$ $\frac{du_c}{dt}$ $u_C=U_S$

e^{s_1t} e^{s_2t} t 0

$$K_1=\frac{1}{s_2-s_1}\left(s_2 u_C(0)-U_S-\frac{i_L(0)}{C}\right)$$

$$K_2=\frac{1}{s_1-s_2}\left(s_1 u_C(0)-U_S-\frac{i_L(0)}{C}\right)$$

www.DuWeiSemi.cc

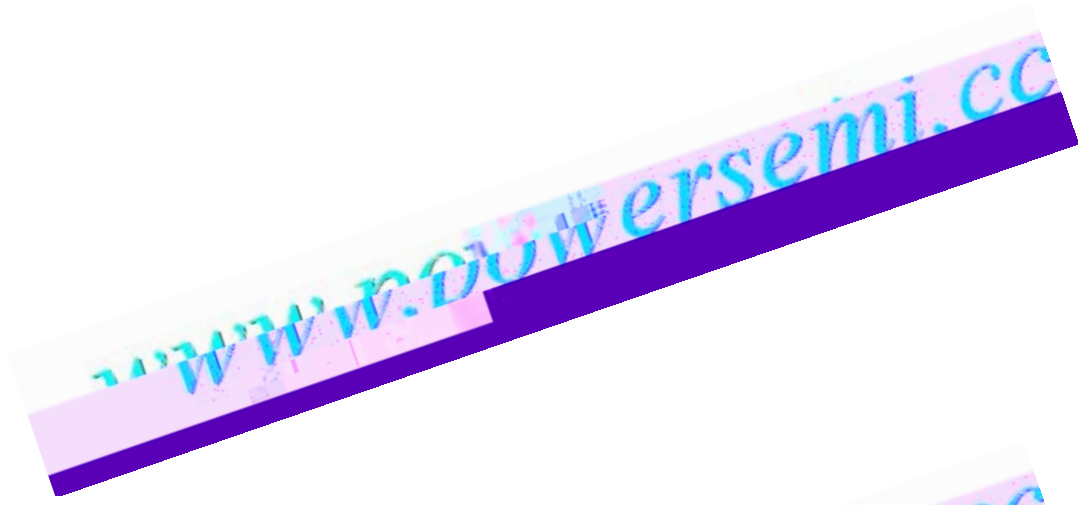
www.DuWersemi.cc

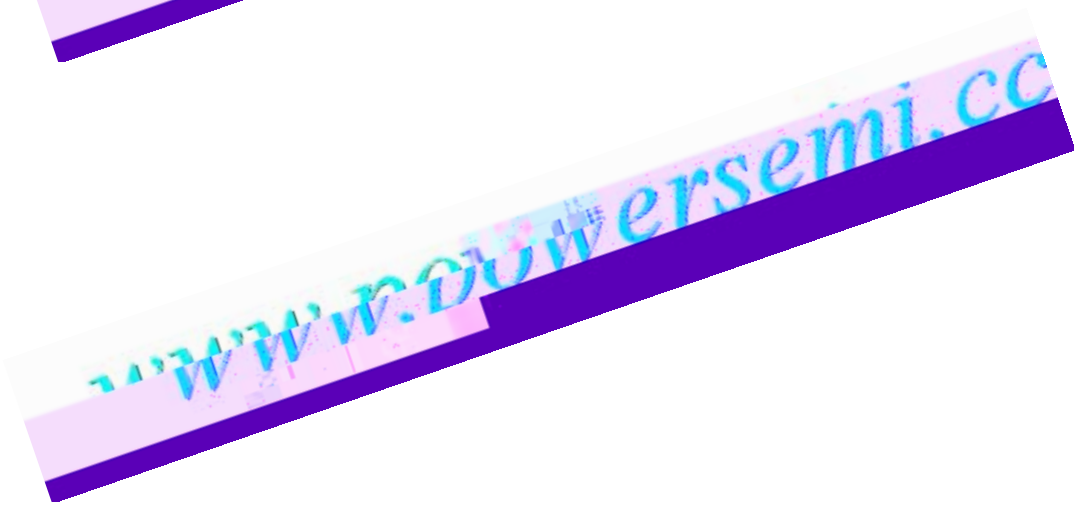
www.DuWersemi.cc

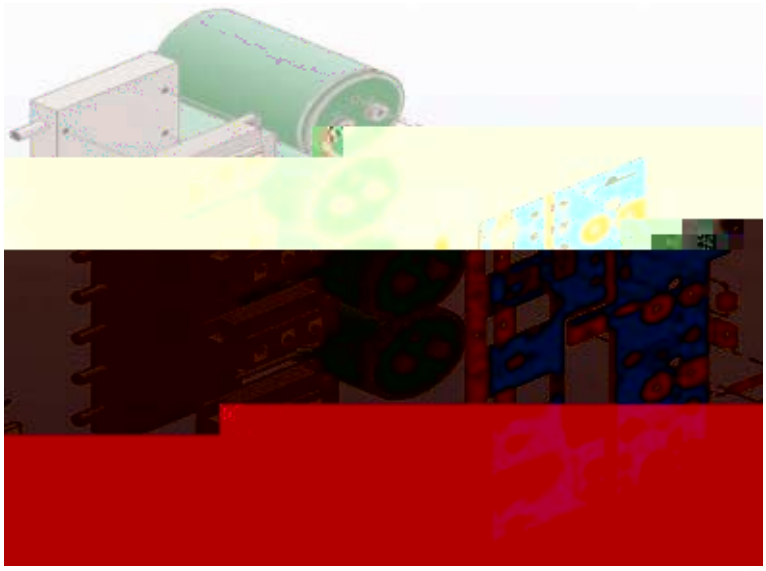

6

:

,

,

,

,

1.International Rectifier Application Notes. AN990. Application Characterization of IGBTs[Z] ,2002.

2.Dynex Semiconductor. AN5505. Parallel Operation of Dynex IGBT Modules[Z] ,2001.

3 IGBT J

2004

4. M . 2001